Medio S.A.

Semi-automatic intermediate proofer

Performances

Number of carriers : from 22 to 84, depending on model
• Number of pockets per carrier:
6 or 7 pockets of 650 g maximum
5 or 6 pockets of 1000 g maximum
• Dough piece weight: from 80 to 1000 g, depending on model

The advantages

• High storage capacity
• Full loading
• Possibility of unloading the machine while continuing to load
• Very easy to use
• Silent
• Automatic dough resting cycle
• Adapted for use with any Bongard moulder
• Ideal to make special breads

Use

The Medio SA semi-automatic intermediate proofer is a machine intended for the intermediate proofing of dough. It is suitable for bakers processing between 800-1200 dough pieces from 60 to 1000g per hour.

Operating principle

Once weighed and divided, the dough pieces are placed in felt gutters. Then they rest between 15 and 30 minutes, depending on the strength of the dough and quality of the mixing. This intermediate proofing period favours gluten relaxation and thus produces dough that is easier to mould. Once weighed and divided, the dough pieces are placed in felt pockets. Useable in discontinuous mode (by one person) or continuous mode (by two people), the side loading is manual while frontal unloading is motorised towards the moulder.
It should be noted that the Medio SA intermediate proofer offers the possibility of integral loading to fill all the proofer's carriers. It also allows silent movement of the carriers without any risk of blocking. The carriers are composed of treated felt pockets on a thermoformed frame or gutters to avoid sticking and maintain a constant hygrometric level of the dough pieces.

Construction

- Epoxy painted (food-grade)
- UV lamps
- Humidity extractors
- Cast iron sprockets with steel drive shafts
- Moulding table
- Quiet running
- Hanging control panel
- Electrical thermal overload protection of the Major moulder and the out-feed belt TE
- On castors
- Control circuit : 24 V
- Supply voltage : 3PH + N 400 V 50/60 Hz

Options:
- Blower to dry felts
- Adjustable flour duster
- Transforming manual loading mode to automatic mode
- On request: lower height of 2240mm

• • • **Important note :**

Nylon mesh pockets on request without extra cost

BONGARD

Medio SA semi-automatic intermediate proofer

• • • How to understand the reference, ex : MEDIO SA10 650-6-52 ?

SA 10 : width of carriers : 1060 mm
650 : maximum dough weight per pocket (in g)
6 : Pockets per carrier
52 : Number of carriers

Available models
Medio SA10 Model 650
Intermediate proofer Medio SA10 650-6-62
Intermediate proofer Medio SA10 650-6-74
Intermediate proofer Medio SA10 650-6-84
Medio SA10 Model 1000
Intermediate proofer Medio SA10 1000-5-62
Intermediate proofer Medio SA10 1000-5-74
Intermediate proofer Medio SA10 1000-5-84
Medio SA12 Model 650
Intermediate proofer Medio SA12 650-7-62
Intermediate proofer Medio SA12 650-7-74
Intermediate proofer Medio SA12 650-7-84
Medio SA12 Model 1000
Intermediate proofer Medio SA12 1000-6-62
Intermediate proofer Medio SA12 1000-6-74
Intermediate proofer Medio SA12 1000-6-84

Options	***Model***
Felt dryer with blower at rear	MEDIO SA 10
Felt dryer with blower at rear	MEDIO SA 12
Felt dryer with blower on the roof	MEDIO SA 10
Felt dryer with blower on the roof	MEDIO SA 12
Flour duster for 650 g pockets	MEDIO SA 10
Flour duster for 650 g pockets	MEDIO SA 12
Flour duster for 1000 g pockets	Medio SA 10
Flour duster for 1000 g pockets	Medio SA 12

Medio SA 10 semi-automatic intermediate proofer

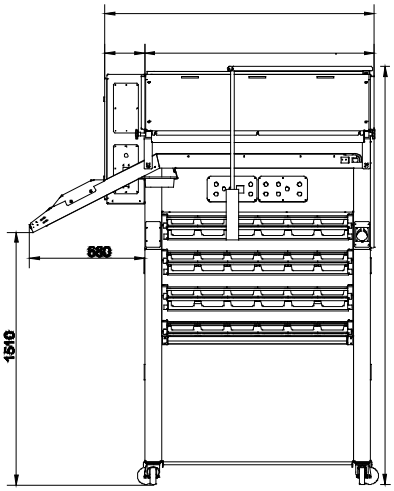

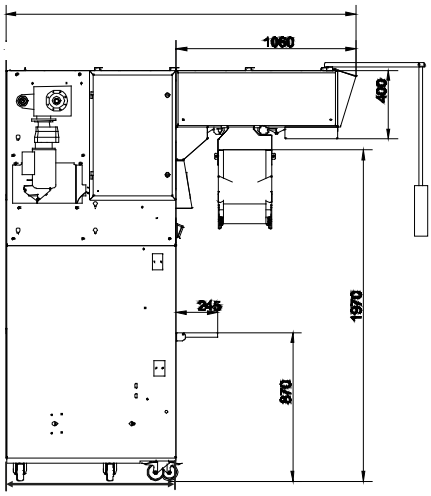

side view n°1

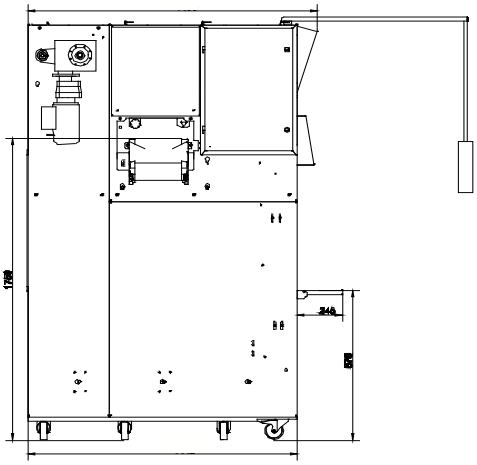

side view n°2

General features				
		SA10	***SA10***	***SA10***
		650-6-62	***650-6-74***	***650-6-84***
Models SA 10		***1000-5-62***	***1000-5-74***	***1000-5-84***
Width carriers	(mm)	1060	1060	1060
Performances				
Number of carriers		62	74	84
Number of pockets (total and useful) per integral loading	650	6/372	6/444	6/504
	1000	5/310	5/370	5/420
Dough weight mini.-maxi. (g)	650	80 - 650	81 - 650	82 - 650
	1000	80 - 1000	81 - 1000	82 - 1000
Dimensions / Weight / Power				
Side view		View 2	View 1	View 2
A (mm)	(mm)	1350	1350	1350
B (mm)	(mm)	1440	1440	1870
C (mm)	(mm)	2460	2460	2460
G (mm) control panel	(mm)	240	240	240
H (mm)	(mm)	1610	2500	2050
Net weight Medio only (kg)	(kg)	850	950	1000
Power Medio only (kW)	(kW)	0,55	0,55	0,55
Electrical power - including all options - with divider, moulder and TE (kW)	(kW)	2,7	2,7	2,7

Packing for Models SA 10					
	Model SA 10		***650-6-62***	***650-6-74***	***650-6-84***
			1000-5-62	***1000-5-74***	***1000-5-84***
Mainland or By sea : (Wooden Crate)	Width	(mm)	1200	1200	1200
	Length	(mm)	2650	2650	2650
	Height	(mm)	1800	1800	1800
	Weight	(kg)	1075	1225	1275

Medio SA 12 Semi-automatic intermediate proofer

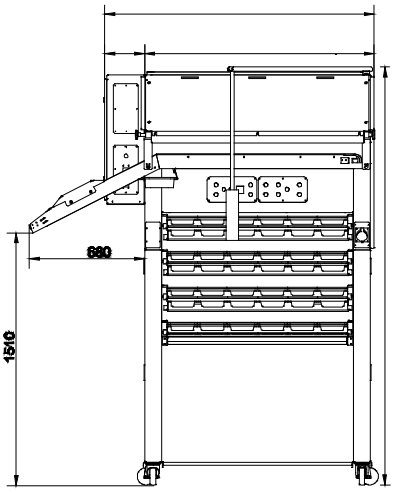

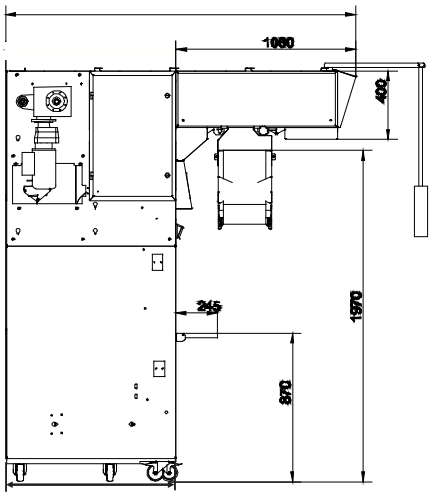

side view n°1

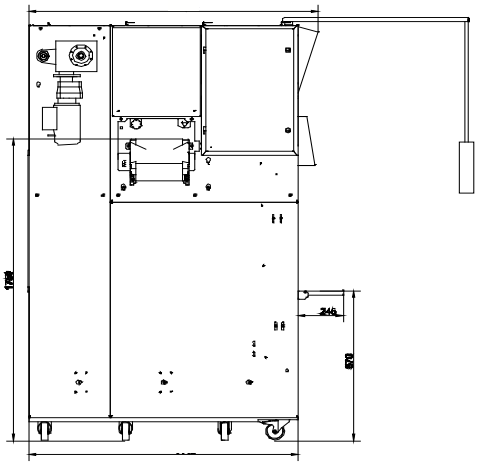

side view n°2

Models SA 12		***SA12 650-7-62 1000-6-62***	***SA12 650-7-74 1000-6-74***	***SA12 650-7-84 1000-6-84***
Width carriers		1240	1240	1240
Performances				
Number of carriers		62	74	84
Number of pockets (total and useful) per integral loading 650 g	Mini-Maxi	7/434	7/518	7/588
1000 g	Mini-Maxi	6/372	6/444	6/504
Dough weight mini.-maxi. 650 g	Mini-Maxi	80 - 650	80 - 650	80 - 650
1000 g	Mini-Maxi	80 - 1000	80 - 1000	80 - 1000
Dimensions / weight / power				
Side view		view 2	View 1	View 2
A	(mm)	1530	1530	1530
B	(mm)	1440	1440	1870
C	(mm)	2460	2460	2460
G - control panel	(mm)	240	240	240
H	(mm)	1610	2500	2050
Net weight Medio only	(kg)	850	950	1000
Power Medio only	(kW)	0,55	0,55	0,55
Electrical power - including all options -with divider, moulder and TE	(kW)	2,7	2,7	2,7

Packing for Models SA 12					
Mainland or By sea : (Wooden Crate)	***Model SA 12***		***650-7-62 1000-6-62***	***650-7-74 1000-6-74***	***650-7-84 1000-6-84***
	Width	(mm)	1200	1200	1200
	Length	(mm)	2650	2650	2650
	Height	(mm)	1800	1800	1800
	Weight	(kg)	1075	1225	1275